CerchioLighting
cerchio = circle

CRISTALLI C

BEAM DOWN

(STANDARD GRADE)

CerchioLighting
cerchio = circle

CODE: CH-CRST-SH

PROJECT

SPECTYPE

NOTES

LED 110-277V IP20 STANDARD LUTRON CASAMBI

GENERAL INFORMATION:

The Cristali C Ceiling Light is a modern, architecturally inspired fixture that combines geometric elegance with luxurious crystal detailing. Designed to elevate any interior, this ceiling-mounted light features a refined metal base and precision-cut crystals that reflect light beautifully, creating a sophisticated ambiance. Available in multiple sizes, configurations, and finishes, the Cristali C is perfect for contemporary living spaces, dining areas, and upscale commercial environments, offering both visual impact and versatile functionality.

MATERIAL:

Metal + glass

VOLTAGE:

110-277V

LIGHTING:

LED

IP RATING:

20

APPLIANCE CLASS:

I

FINISHING:

White		Inox	
Chrome		Oxydized	
Silver Leaf		Gunmetal	
Gold Leaf		Brushed Rosé	
Black		Brush. Bronze	
Corten		Brush. Gold	
Dove grey			

OUTDOOR
TECHNICAL
DECORATIVE

C ETL LISTED US

WE WELCOME ALL CUSTOM ORDERS

CONTACT US:
sales@gordonbullard.com
www.cerchiolighting.com
1-877-964-4646

Due to the dynamic nature of lighting products and the associated technologies, luminaire data on all specification sheets is subject to change at the discretion of Gordon Bullard LLC and associated companies.
©2025 All Rights Reserved

Updated 04/30/2025

CerchioLighting
cerchio = circle

CODE: CH-CRST-SH

PROJECT

SPECTYPE

NOTES

HOW TO ORDER:	CODE:
Example: CODE: CH-CRST-SH-1-PL80-K27-DIM-WH	CH-CRST-SH-1-PL80-K27-DIM-WH

1	MODELS:	

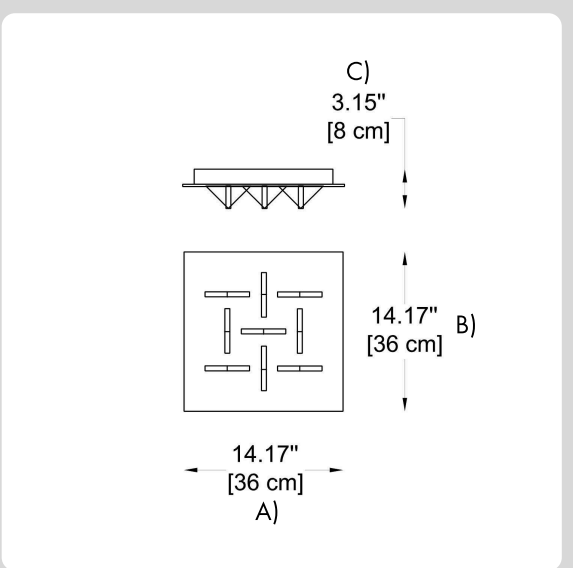

CODE: -2-PL36

DIMENSIONS:

A) Length -	L:	14.17" (36 cm)
B) Width -	W:	14.17" (36 cm)
C) Height -	H:	3.15" (8 cm)

LIGHT SOURCE:

LED / 19W / 1,450 lm / CRI90

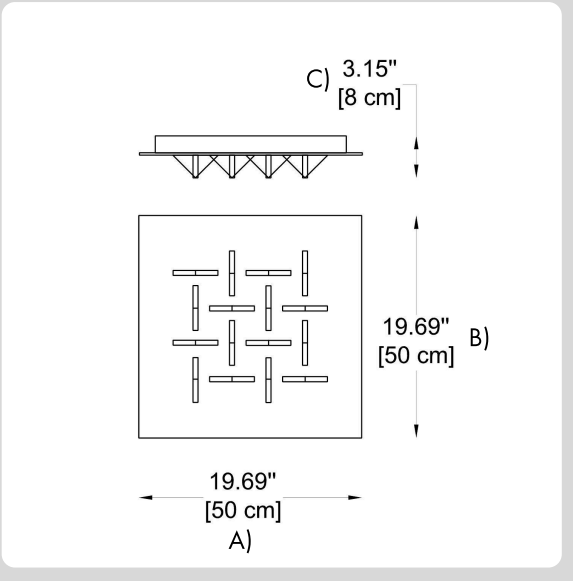

CODE: -2-PL50

DIMENSIONS:

A) Length -	L:	19.7" (50 cm)
B) Width -	W:	19.7" (50 cm)
C) Height -	H:	3.15" (8 cm)

LIGHT SOURCE:

LED / 35W / 2,600 lm / CRI90

OUTDOOR
TECHNICAL
DECORATIVE

WE WELCOME ALL CUSTOM ORDERS

CONTACT US:
sales@gordonbullard.com
www.cerchiolighting.com
1-877-964-4646

Due to the dynamic nature of lighting products and the associated technologies, luminaire data on all specification sheets is subject to change at the discretion of Gordon Bullard LLC and associated companies.
©2025 All Rights Reserved

Updated 04/30/2025

CerchioLighting
cerchio = circle

CODE: CH-CRST-SH

PROJECT

SPECTYPE

NOTES

HOW TO ORDER:	CODE:
Example: CODE: CH-CRST-SH-1-PL80-K27-DIM-WH	CH-CRST-SH-1-PL80-K27-DIM-WH

1 MODELS:

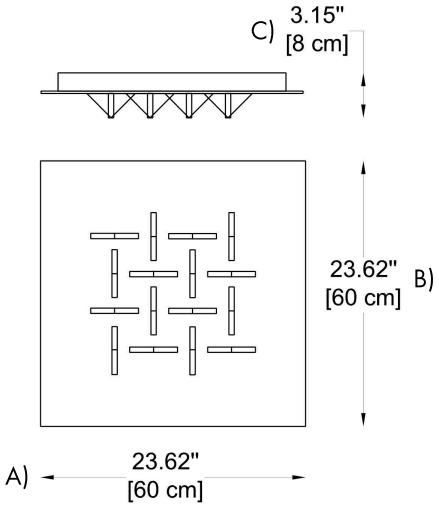

CODE: -2-PL60

DIMENSIONS:

A) Length -	L:	23.62" (60 cm)
B) Width -	W:	23.62" (60 cm)
C) Height -	H:	3.15" (8 cm)

LIGHT SOURCE:

LED / 35W / 2,600 lm / CRI90

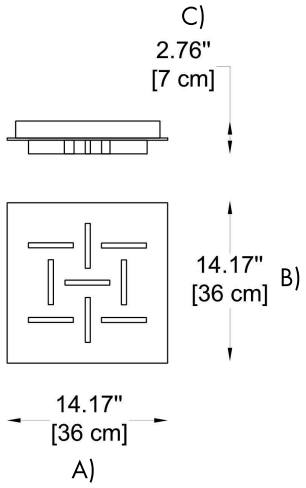

CODE: -1-PL36

DIMENSIONS:

A) Length -	L:	14.17" (36 cm)
B) Width -	W:	14.17" (36 cm)
C) Height -	H:	2.76" (8 cm)

LIGHT SOURCE:

LED / 19W / 1,450 lm / CRI90

CONTACT US:
sales@gordonbullard.com
www.cerchiolighting.com
1-877-964-4646

Due to the dynamic nature of lighting products and the associated technologies, luminaire data on all specification sheets is subject to change at the discretion of Gordon Bullard LLC and associated companies.

©2025 All Rights Reserved

Updated 04/30/2025

CerchioLighting
cerchio = circle

CODE: CH-CRST-SH

PROJECT

SPECTYPE

NOTES

HOW TO ORDER:	CODE:
Example: CODE: CH-CRST-SH-1-PL80-K27-DIM-WH	CH-CRST-SH-1-PL80-K27-DIM-WH
1 MODELS:	

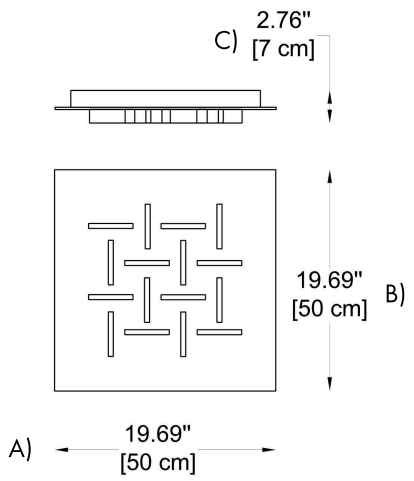

CODE: -1-PL50

DIMENSIONS:

A) Length -	L:	19.7" (50 cm)
B) Width -	W:	19.7" (50 cm)
C) Height -	H:	2.76" (8 cm)

LIGHT SOURCE:

LED / 35W / 2,600 lm / CRI90

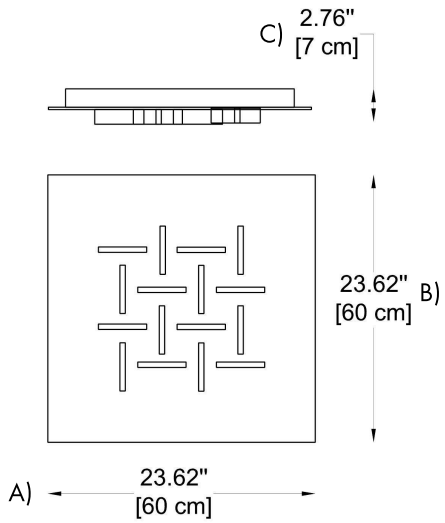

CODE: -1-PL60

DIMENSIONS:

A) Length -	L:	23.62" (60 cm)
B) Width -	W:	23.62" (60 cm)
C) Height -	H:	2.76" (8 cm)

LIGHT SOURCE:

LED / 35W / 2,600 lm / CRI90

OUTDOOR
TECHNICAL
DECORATIVE

WE WELCOME ALL CUSTOM ORDERS

CONTACT US:
sales@gordonbullard.com
www.cerchiolighting.com
1-877-964-4646

Due to the dynamic nature of lighting products and the associated technologies, luminaire data on all specification sheets is subject to change at the discretion of Gordon Bullard LLC and associated companies.
©2025 All Rights Reserved

Updated 04/30/2025

CerchioLighting
cerchio = circle

CODE: CH-CRST-SH

PROJECT

SPECTYPE

NOTES

HOW TO ORDER:	CODE:
Example: CODE: CH-CRST-SH-1-PL80-K27-DIM-WH	CH-CRST-SH-1-PL80-K27-DIM-WH
1 MODELS:	

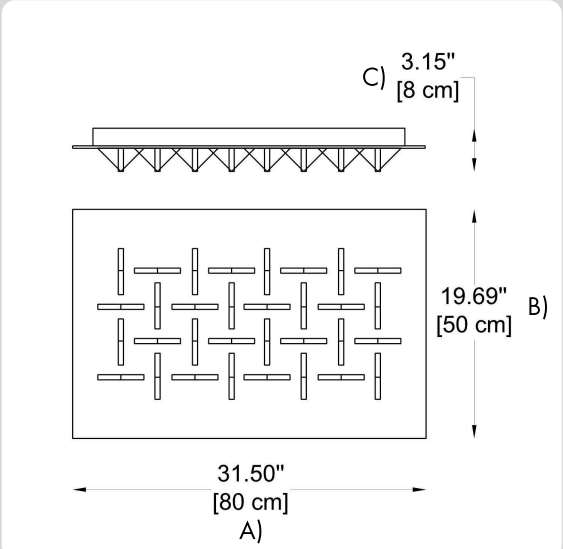

CODE: -2-PL80

DIMENSIONS:

A) Length -	L:	31.5" (80 cm)
B) Width -	W:	19.7" (50 cm)
C) Height -	H:	2.76" (8 cm)

LIGHT SOURCE:

LED / 70W / 5,200 lm / CRI90

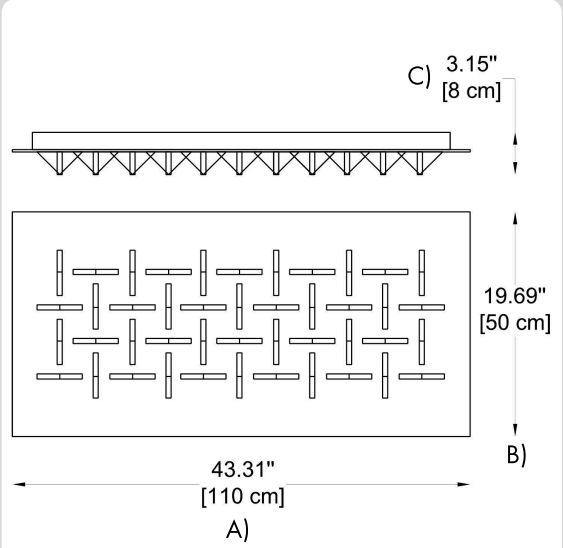

CODE: -2-PL110

DIMENSIONS:

A) Length -	L:	43.31" (110 cm)
B) Width -	W:	23.62" (60 cm)
C) Height -	H:	2.76" (8 cm)

LIGHT SOURCE:

LED / 105W / 7,800 lm / CRI90

OUTDOOR
TECHNICAL
DECORATIVE

WE WELCOME ALL CUSTOM ORDERS

CONTACT US:
sales@gordonbullard.com
www.cerchiolighting.com
1-877-964-4646

Due to the dynamic nature of lighting products and the associated technologies, luminaire data on all specification sheets is subject to change at the discretion of Gordon Bullard LLC and associated companies.
©2025 All Rights Reserved

Updated 04/30/2025

CerchioLighting
cerchio = circle

CODE: CH-CRST-SH

PROJECT

SPECTYPE

NOTES

HOW TO ORDER:	CODE:
Example: CODE: CH-CRST-SH-1-PL80-K27-DIM-WH	CH-CRST-SH-1-PL80-K27-DIM-WH
1 MODELS:	

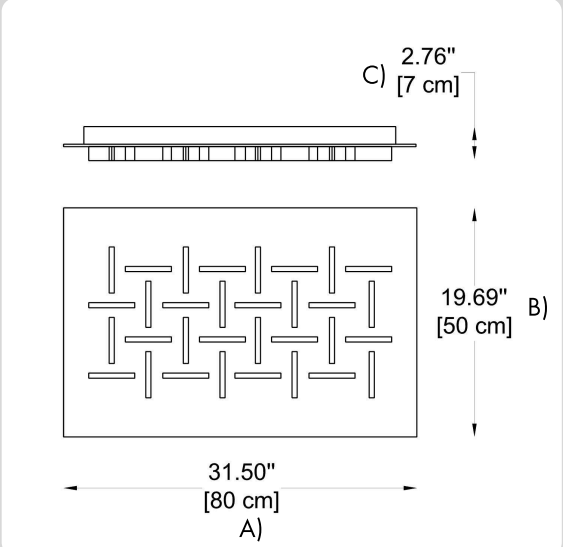

CODE: -1-PL80

DIMENSIONS:

A) Length - L: 31.5" (80 cm)
B) Width - W: 19.7" (50 cm)
C) Height - H: 2.76" (8 cm)

LIGHT SOURCE:

LED / 70W / 5,200 lm / CRI90

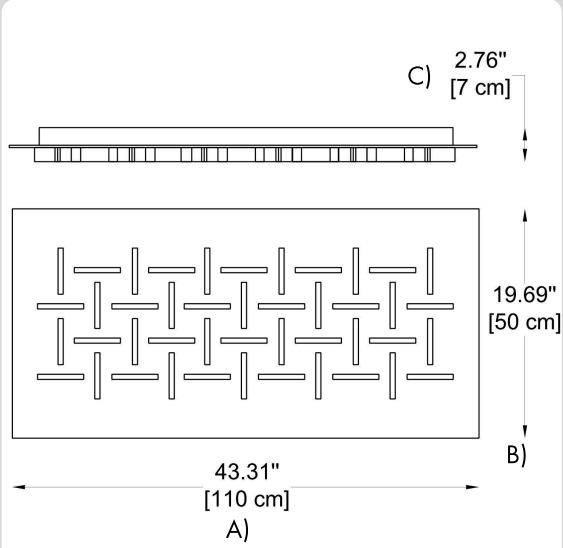

CODE: -1-PL110

DIMENSIONS:

A) Length - L: 43.31" (110 cm)
B) Width - W: 23.62" (60 cm)
C) Height - H: 2.76" (8 cm)

LIGHT SOURCE:

LED / 105W / 7,800 lm / CRI90

OUTDOOR
TECHNICAL
DECORATIVE

WE WELCOME ALL CUSTOM ORDERS

CONTACT US:
sales@gordonbullard.com
www.cerchiolighting.com
1-877-964-4646

Due to the dynamic nature of lighting products and the associated technologies, luminaire data on all specification sheets is subject to change at the discretion of Gordon Bullard LLC and associated companies.
©2025 All Rights Reserved

Updated 04/30/2025

CerchioLighting
cerchio = circle

CODE: CH-CRST-SHD

PROJECT

SPECTYPE

NOTES

LED | 110-277V | IP20 | STANDARD | LUTRON | CASAMBI

HOW TO ORDER:	CODE:
Example: CODE: CH-CRST-SH-1-PL80-K27-DIM-WH	CH-CRST-SH-1-PL80-K27-DIM-WH

2 CCT:

-K27	2700K
-K30	3000K
-K40	4000K

3 DIMMING OPTIONS:

-NON	Non-Dimmable
-DIM	0-10V
-DALI	DALI
-CAS	Casambi
-LUT	Lutron

4 FINISH OPTIONS:

-WH	White
-CP	Chrome
-CL	Silver Leaf
-GL	Gold Leaf
-BL	Black
-CR	Corten
-DG	Dove grey
-IN	Inox
-OX	Oxydized
-GN	Gunmetal
-BR	Brushed Rosé
-BB	Brush. Bronze
-BG	Brush. Gold

OUTDOOR
TECHNICAL
DECORATIVE

C ETL LISTED US

WE WELCOME ALL CUSTOM ORDERS

CONTACT US:
sales@gordonbullard.com
www.cerchiolighting.com
1-877-964-4646

Due to the dynamic nature of lighting products and the associated technologies, luminaire data on all specification sheets is subject to change at the discretion of Gordon Bullard LLC and associated companies.
©2025 All Rights Reserved

Updated 04/30/2025