CerchioLighting
cerchio = circle

BIBENDUM LARGE

(PENDANT)

CerchioLighting
cerchio = circle

CODE: SE198-C

PROJECT
SPEC TYPE
NOTES

LED E26 IP20

GENERAL INFORMATION:

The BIBENDUM SUSPENSION Collection is defined by the craftsmanship of blown glass, creating shapes from puffs, sensing every thickness and extending them into slightly different shapes, making each lamp unique, essential, and brilliant at the same time. Available in two finishes, transparent glass and white frosted glass, and in three sizes.

FINISHING:

Transparent Glass, White Frosted Glass

MATERIAL:

Glass

VOLTAGE:

110-277V

LIGHTING:

E26, LED

LED E26

ELECTRICAL CABLE:

White fabric cable 2 meters, Black fabric cable 2 meters

IP RATING:

20

IP20

APPLIANCE CLASS:

I

Contact Us:
sales@gordonbullard.com
www.cerchiolighting.com
1 877-964-4646

Due to the dynamic nature of lighting products and the associated technologies, luminaire data on all specification sheets is subject to change at the discretion of Gordon Bullard LLC and associated companies.

©2024 All Rights Reserved

Updated 23/04/2024

CerchioLighting
cerchio = circle

CODE: SE198-C

PROJECT
SPEC TYPE
NOTES

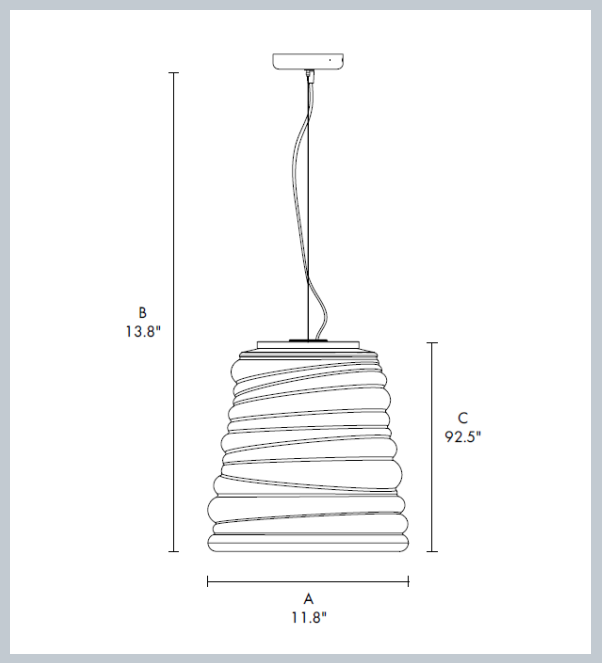

LED E26 IP20

HOW TO ORDER — CODE

Example:
SE198-C-TG-E26-W — SE198-C

1 DIMENSIONS: — SE198-C

SE198-C
DIMENSIONS:

Ø = Diameter

A) Diameter -	**Ø:** 11.8" (30 cm)
B) Height -	**H:** 13.8" (35 cm)
C) Total height -	**H:** 92.5" (235 cm)

2 FINISH OPTIONS (LAMPSHADE):

-TG	Transparent Glass
-WFG	White Frosted Glass

3 LIGHT SOURCES:

-E26	1 x E26 / max 18W
-LED	LED / 17W / 1700 lumens / CRI≥80

4 CCT (FOR LED):

-K30	3000K
-K27	2700K

5 ELECRTICAL CABLE:

-B	Black cable
-W	White cable

Contact Us:
sales@gordonbullard.com
www.cerchiolighting.com
1 877-964-4646

Due to the dynamic nature of lighting products and the associated technologies, luminaire data on all specification sheets is subject to change at the discretion of Gordon Bullard LLC and associated companies.

©2024 All Rights Reserved

Updated 25/04/2024